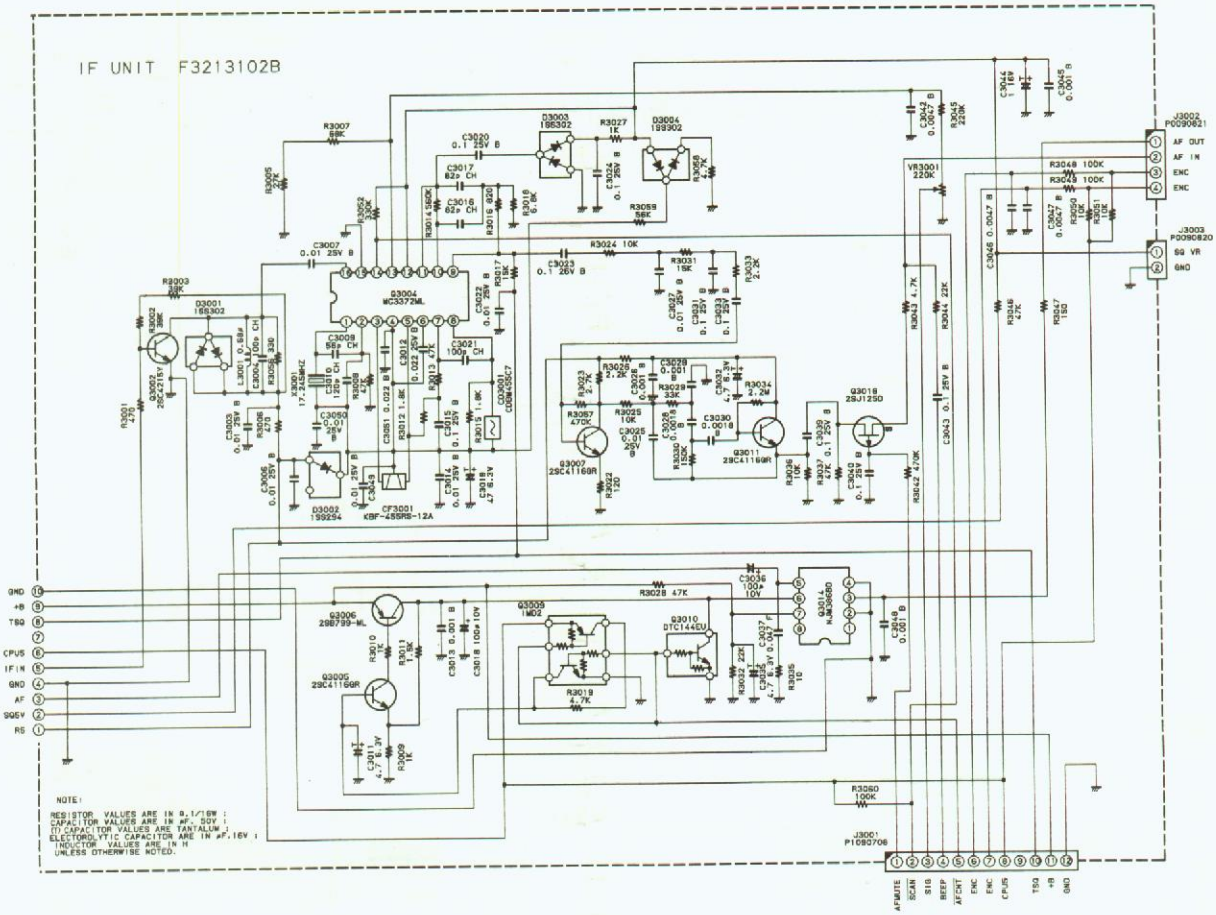
IF UNIT F3213102B
NOTE:
RESISTOR VALUES ARE IN 0.1/16W ;
CAPACITOR VALUES ARE IN μF, 50V ;
(T) CAPACITOR VALUES ARE TANTALUM ;
ELECTROLYTIC CAPACITOR ARE IN μF,16V ;
INDUCTOR VALUES ARE IN H
UNLESS OTHERWISE NOTED.

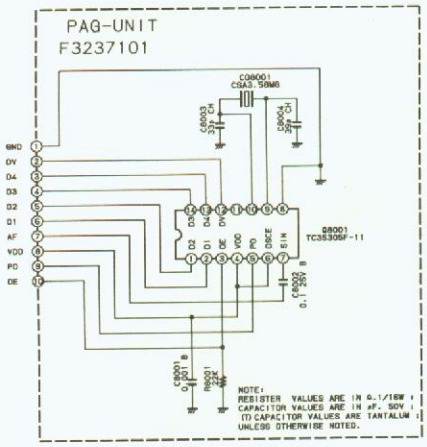
PAG-UNIT
F3237101
NOTE:
RESISTER VALUES ARE IN 0.1/16W ;
CAPACITOR VALUES ARE IN μF, 50V ;
(T) CAPACITOR VALUES ARE TANTALUM ;
UNLESS OTHERWISE NOTED.

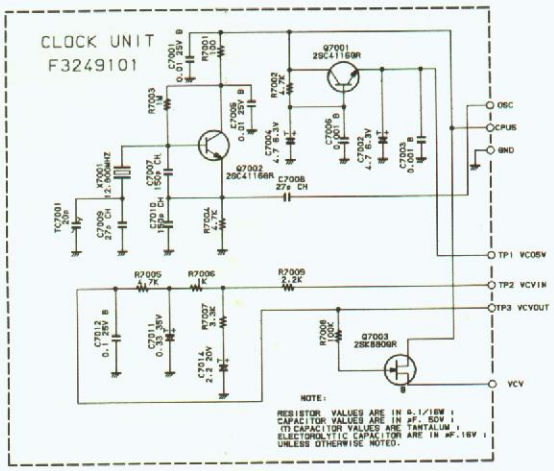
CLOCK UNIT
F3249101
NOTE:
RESISTOR VALUES ARE IN 0.1/16W ;
CAPACITOR VALUES ARE IN μF, 50V ;
(T) CAPACITOR VALUES ARE TANTALUM ;
ELECTROLYTIC CAPACITOR ARE IN μF,16V ;
UNLESS OTHERWISE NOTED.

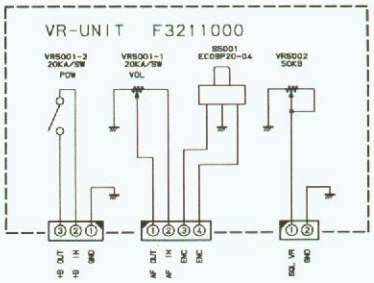
VR-UNIT F3211000